INSTALLATION INSTRUCTIONS
FOR
ED 300 BEVERAGE DISPENSER PANEL SUPPORT KIT (P/N 629087423)

Table 1. Loose Shipped Parts

Item No.	Part No.	Name	Qty.
1	620711202	Template, Beverage Panel	1
2	620711201	Template, Motor Plate	1
3	70178	Screw, No. 8-32 by !/2-inch Long	4
4	70076	Keps Nut, No. 8-32	2
5	620045416	Support, Beverage Panel	1
6	70959	Nutsert, Hex, No. 8-32	2
7	620919528	Installation Instructions	1
8	50705	Cable Tie	1

WARNING:
Disconnect power to the unit before servicing. Follow all lock out/tag out procedures established by the user. Verify all power is off to the unit before performing any work.

Failure to comply could result in serious injury, death or damage to the equipment.

1. Unpack kit. Make sure all parts in Kit are present and in good condition.

   NOTE: Refer to Figure 1 for Steps 2 through 6:
2. Remove the merchandiser by lifting up on the sides to disengage the merchandiser mounting bracket “hooks” from the slots in the cabinet and then rotating the merchandiser forward.
3. Remove the clear plastic ice chute covers by spreading the sides apart and pulling forward from the tabs on the ice chute. Remove the ice chutes (4 nuts each) from the ice storage hopper.
4. Remove the lower front panel (2 screws).
5. Remove the beverage valve panel from the cabinet (4 screws). With the panel hanging forward, supported by the flexible syrup and water product lines, remove the center top wiring access panel (4 screws).
6. Secure the yellow wires that run across the rear center of the beverage panel away from the panel support bracket that will be installed with this kit. to prevent cutting during the hole drilling operation or pinching when the beverage panel is secured to the support bracket.
7. Drill a 3/16 in. diameter hole in the center flange for the access panel as shown in Figure 4. With the wire tie (item 8) supplied in the kit, secure the yellow wires to the underside of this center flange.
8. Position the beverage panel template (item I) as shown in Figure 2. If necessary, remove the valve bodies from their mounting blocks on either side of the template for drill clearance. Drill two 3/16 in. diameter holes into the beverage panel.
9. Position the motor plate template (item 2) on the motor plate upright as shown in Figure 3. Drill two l/4 in. diameter holes into the upright. Secure the beverage panel support (item 5) to the upright with #8-32 screws (item 3) and nuts (item 4) as shown in Figure 4.
10. Secure the beverage panel in position on the cabinet with the top two screws. Do not tighten the screws to the cabinet; this will allow some freedom of movement to align the two center mounting screws. Secure the beverage panel two center screws (item 4) to the support (item 5) as shown in Figure 5. Complete the beverage panel installation by securing the four panel cabinet screws. Replace the two valves if removed in Step 8.

© 2000-2010, IMI Cornelius Inc.

11. Replace the ice chute and covers. Make sure that the ice chute gaskets are aligned properly on the back of the chutes and compressed against the hopper mounting flange.
12. Replace the lower front panel and the merchandiser. Make sure that the merchandiser hooks are fully engaged in the cabinet slots by pushing down on the merchandiser to seat the hooks in the slots. The unit is now ready for operation.

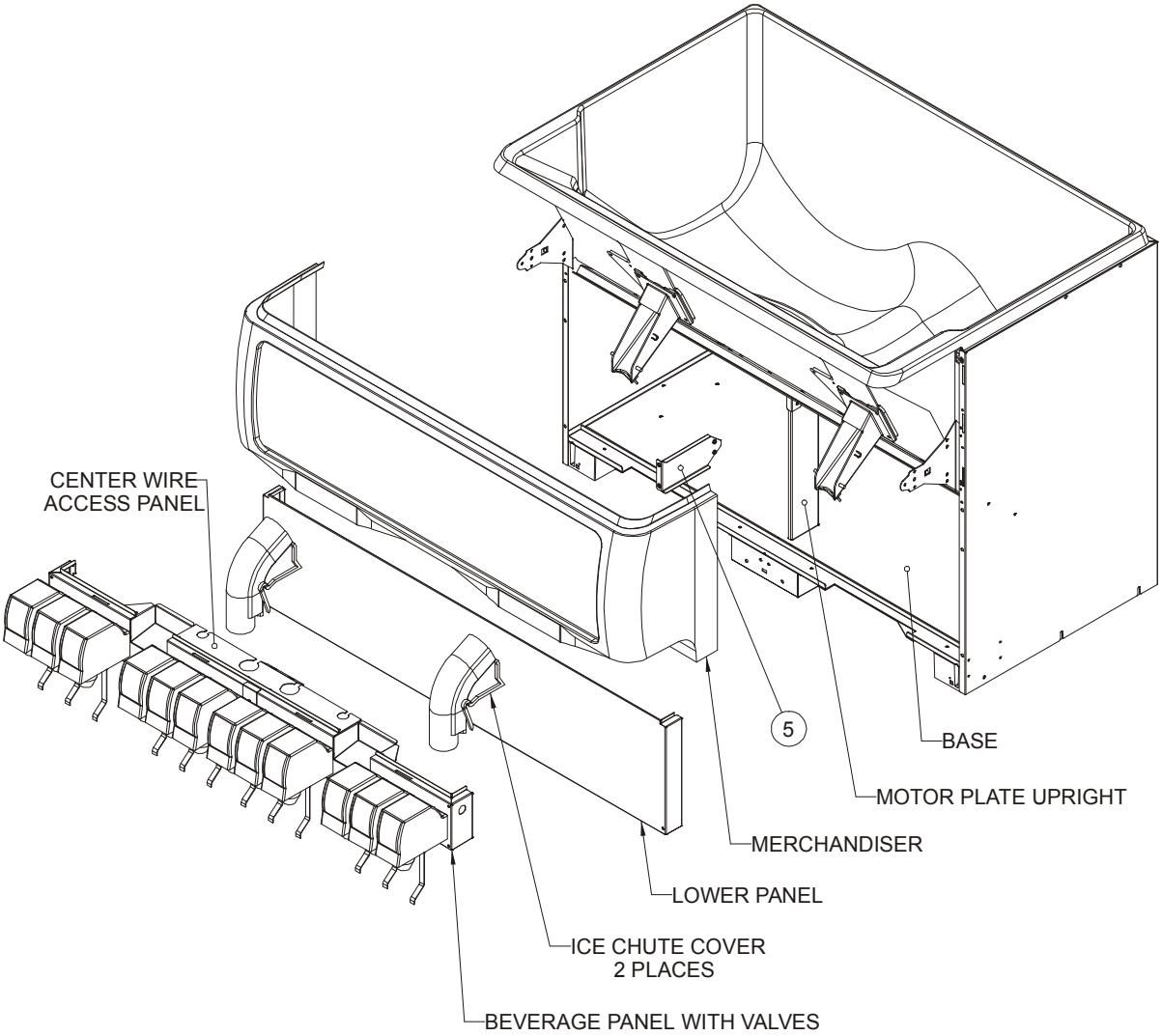

(NOTES: SOME PARTS ARE REMOVED FOR VIEW CLARITY)

Figure 1.

 © 2000-2010, IMI Cornelius Inc.

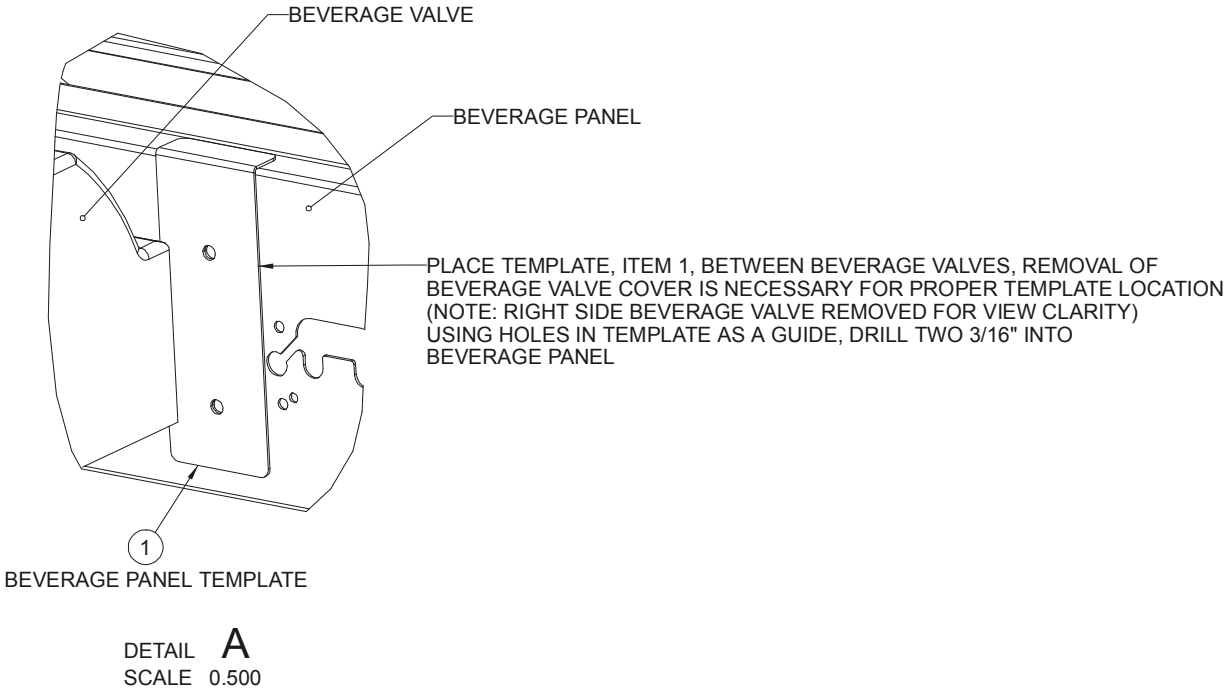

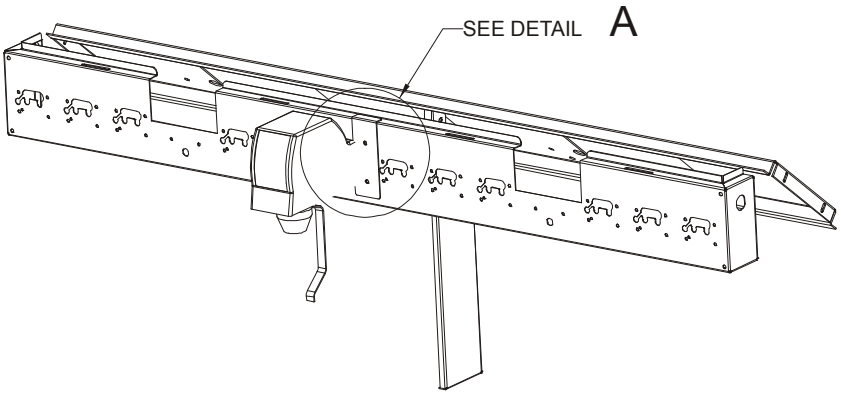

BEVERAGE PANEL TEMPLATE INSTRUCTIONS
(NOTE: SOME PARTS ARE REMOVED FOR VIEW CLARITY)

Figure 2

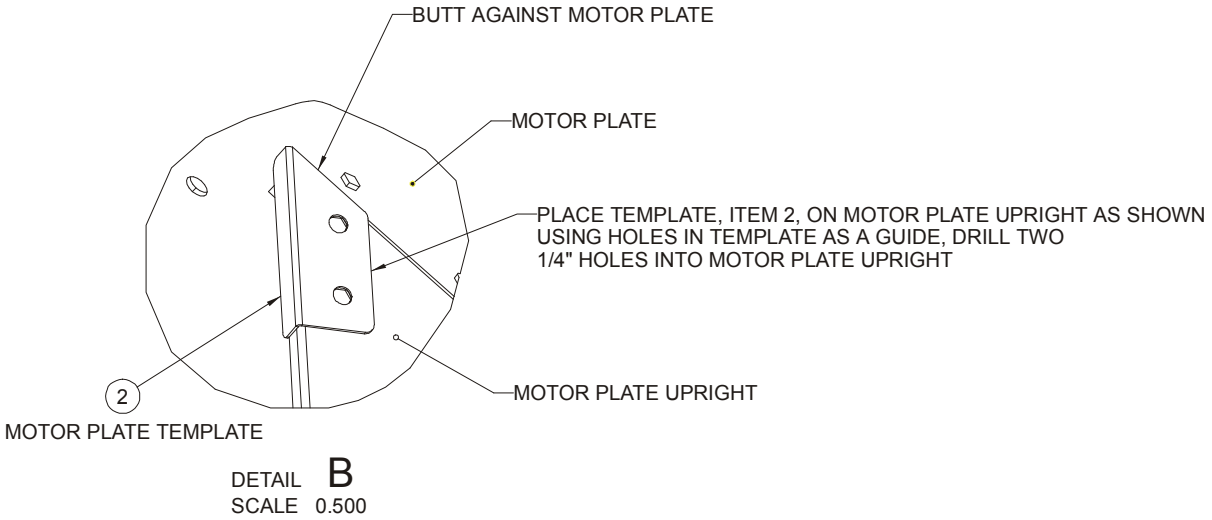

DETAIL B
SCALE 0.500

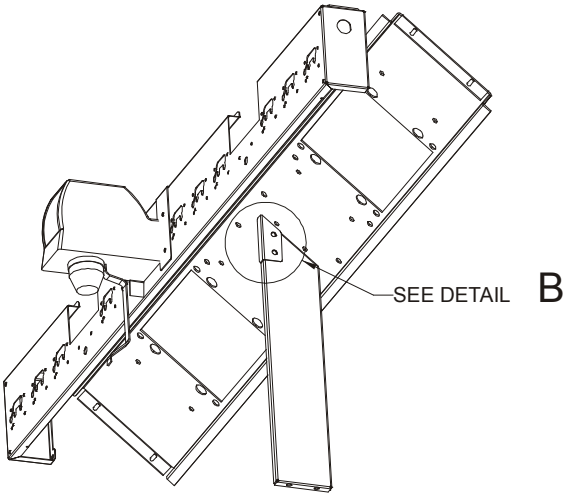

MOTOR PLATE TEMPLATE INSTRUCTIONS
(NOTE: SOME PARTS ARE REMOVED FOR VIEW CLARITY)

Figure 3

 © 2000-2010, IMI Cornelius Inc.

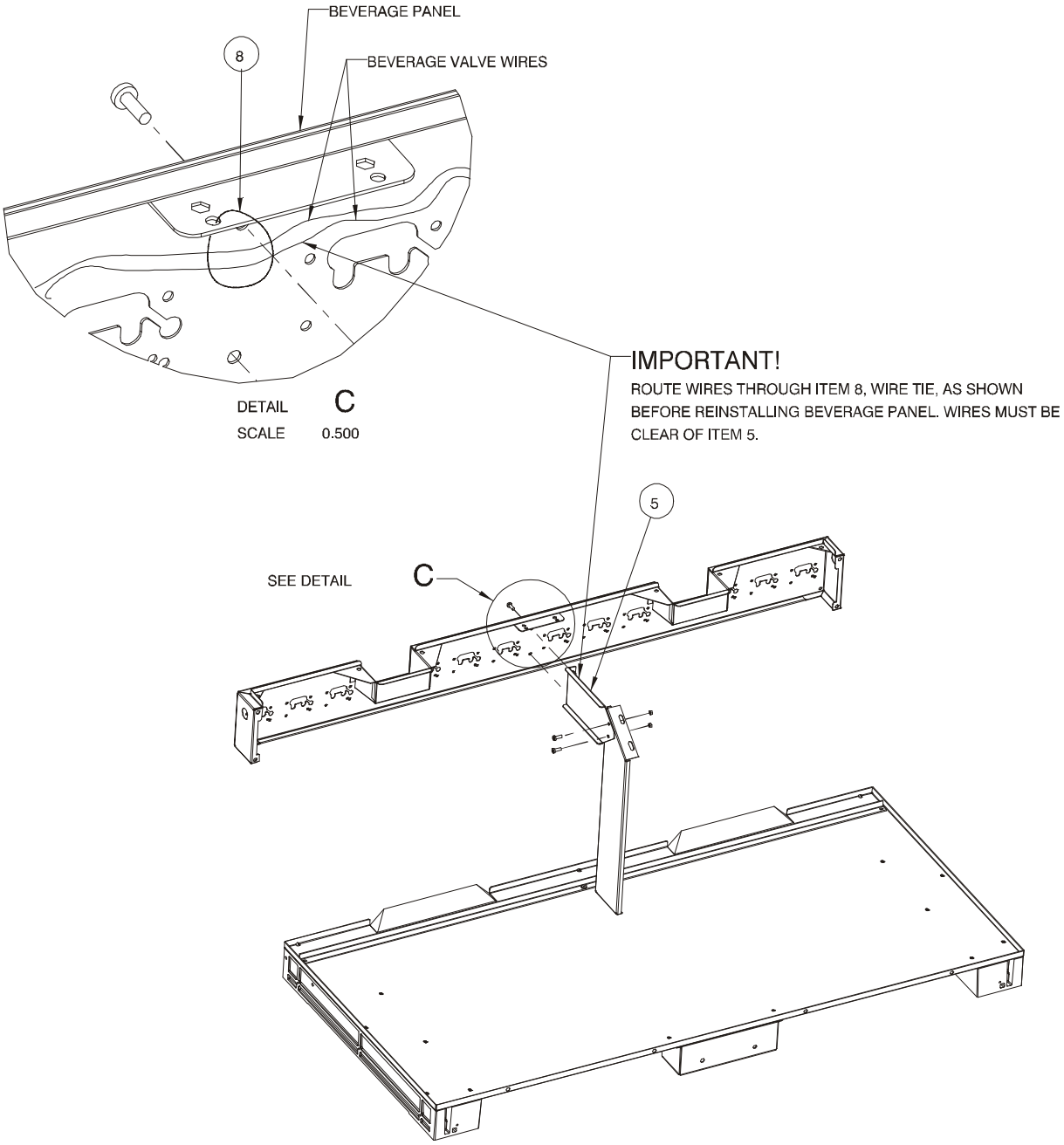
BEVERAGE PANEL
8
BEVERAGE VALVE WIRES
IMPORTANT!
ROUTE WIRES THROUGH ITEM 8, WIRE TIE, AS SHOWN BEFORE REINSTALLING BEVERAGE PANEL. WIRES MUST BE CLEAR OF ITEM 5.
DETAIL C
SCALE 0.500
5
SEE DETAIL C

Figure 4

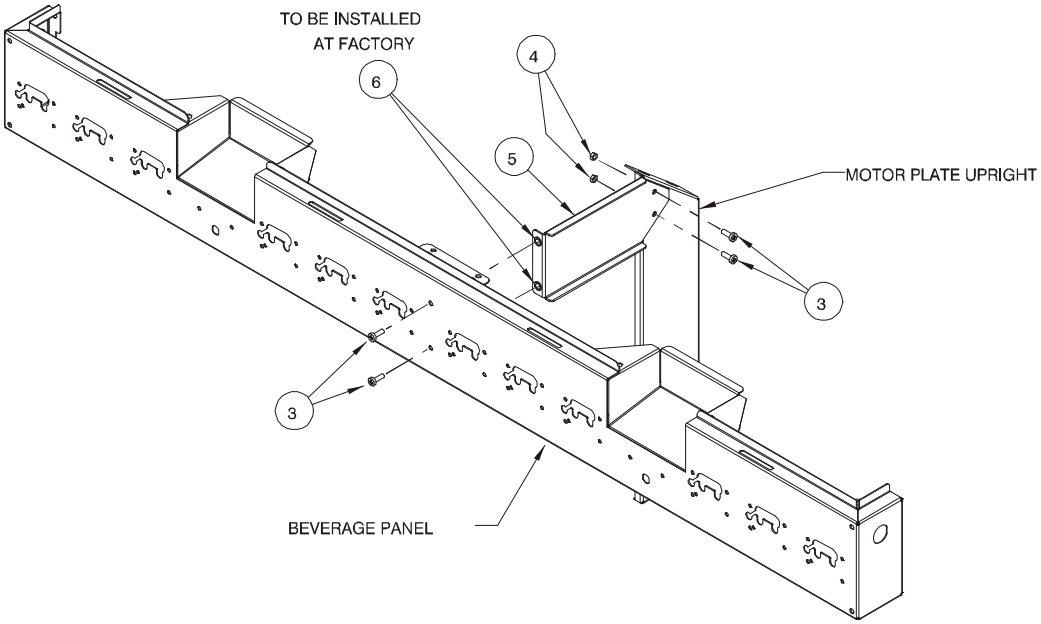

BEVERAGE PANEL SUPPORT INSTALLATION

(NOTE: SOME PARTS ARE REMOVED FOR VIEW CLARITY)

Figure 5

 © 2000-2010, IMI Cornelius Inc.