CNM SERIES

CNM0830**5, CNM0830**6, CNM1030**5 CNM1030**6

ILLUSTRATED PARTS LIST

Release date: April 19, 2018

Publication Number: 548000062

Revision Date: September 6, 2018

Revision: B

Visit the Cornelius web site at http://ice.cornelius.com for all your Literature needs.

Notice

The products, technical information, and instructions contained in this manual are subject to change without notice. These instructions are not intended to cover all details or variations of the equipment, nor to provide for every possible contingency in the installation, operation or maintenance of this equipment. This manual assumes that the person(s) working on the equipment have been trained and are skilled in working with electrical, plumbing, pneumatic, and mechanical equipment. It is assumed that appropriate safety precautions are taken and that all local safety and construction requirements are being met, in addition to the information contained in this manual.

This Product is warranted only as provided in Cornelius' Commercial Warranty applicable to this Product and is subject to all of the restrictions and limitations contained in the Commercial Warranty.

Cornelius will not be responsible for any repair, replacement or other service required by or loss or damage resulting from any of the following occurrences, including but not limited to, (1) other than normal and proper use and normal service conditions with respect to the Product, (2) improper voltage, (3) inadequate wiring, (4) abuse, (5) accident, (6) alteration, (7) misuse, (8) neglect, (9) unauthorized repair or the failure to utilize suitably qualified and trained persons to perform service and/or repair of the Product, (10) improper cleaning, (11) failure to follow installation, operating, cleaning or maintenance instructions, (12) use of "non-authorized" parts (i.e., parts that are not 100% compatible with the Product) which use voids the entire warranty, (13) Product parts in contact with water or the product dispensed which are adversely impacted by changes in liquid scale or chemical composition.

Correct Disposal of this Product

RECYCLE

This marking indicates that this product should not be disposed with other household wastes throughout the EU. To prevent possible harm to the environment or human health from uncontrolled waste disposal, recycle it responsibly to promote the sustainable reuse of material resources. To return your used device, please use the return and collection systems or contact the retailer where the product was purchased. They can take this product for environmental safe recycling.

Trademarks and Copyrights

This document contains proprietary information and it may not be reproduced in any way without permission from Cornelius. This document contains the original instructions for the unit described.

CORNELIUS INC
101 Regency Drive
Glendale Heights, IL
Tel: + 1 800-238-3600

Printed in U.S.

Contact Information

To inquire about current revisions of any documentation or assistance with any Cornelius product, contact:

www.cornelius.com
800-238-3600

NOMENCLATURE 1
CABINET PART LIST 2
WATER SYSTEM PART LIST 5
AIR COOLED PART LIST 8
WATER COOLED PART LIST 11
REMOTE PART LIST 13
ELECTRICAL PART LIST 15

© 2018, Cornelius Inc.

Publication Number: 548000062

 © 2018, Cornelius Inc.

NOMENCLATURE

This parts list contains the service parts available for the following CNM Series.

CNM08306**	**208-230/60/1**
CNM10306**	**208-230/60/1**
CNM08305**	**220-240/50/1**
CNM10305**	**220-240/50/1**

NOTE: * = Represent Condenser Type and Cube Size Refer below for more details.

Model Number Example:

CNM0830AH6

CNM = Cornelius Nordic Modular

08 = 800 lb, in 24 hours capacity

30 = 30 inch wide cabinet

A = Air Cooled Condenser, W = Water Cooled Condenser, R = Remote Cooled Condenser

H = Half Cube Size, F = Full Cube Size G = Grande Cube Size

0 = 115 Volt, 5 = 220-240 V / 50 Hz / 1 Phase, 6 = 208-230 Volt / 60 Hz / 1 Phase, 7 = 3 Phase

Check the model number on the data plate and refer to the correct listing for the specific component.

Check carefully that the correct part is identified and ordered.

© 2018, Cornelius Inc.

Publication Number: 548000062

CABINET PART LIST

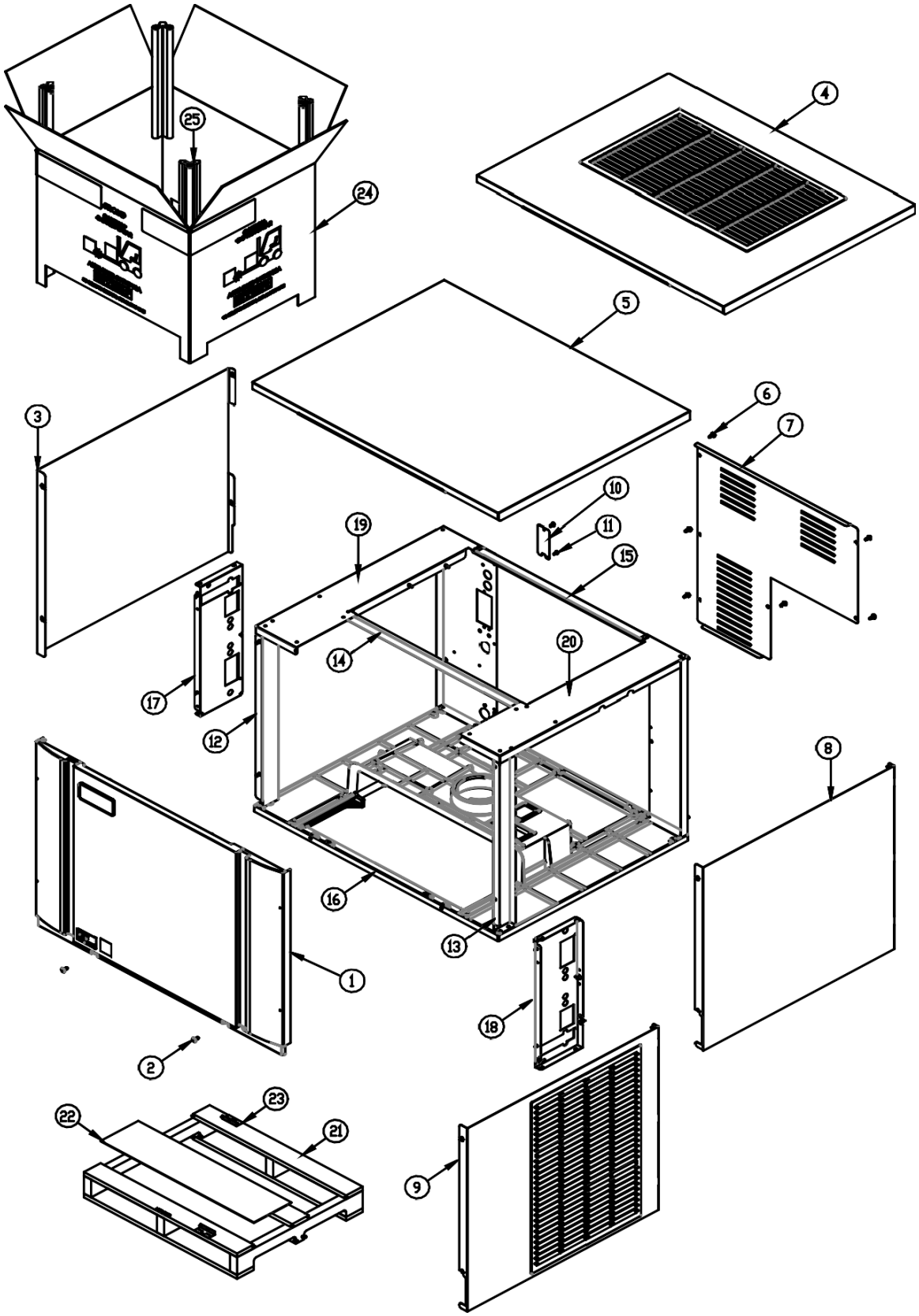

Figure 1.

 © 2018, Cornelius Inc.

NOTE: * = Represent Condenser Type and Cube Size Refer page 1 for more details.

Item No.	Model Number		Description
	CNM0830**6	CNM1030**6	
	208-230/60/1	208-230/60/1	Machine Voltage
1.	620060226	620060226	Front Panel
2.	620060151P	620060151P	Front Panel Screws
3.	620060227	620060227	Left Side Panel
4.	620060135	620060135	Top Panel-Air Cooled
5.	620060143	620060143	Top Panel-Remote and Water Cooled
6.	620204441P	620204441P	Rear Cover Screws
7.	620060136	620060136	Rear Cover
8.	620060228	620060228	Right Side Panel-Remote and Water Cooled
9.	620060229	620060229	Right Side Panel-Air Cooled
10.	620060140	620060140	Junction Box Cover
11.	620204441P	620204441P	Junction Box Screw
12.	620060230	620060230	Left Front Corner Post
13.	620060231	620060231	Right Front Corner post
14.	620060138	620060138	Brace 30 Inch
15.	620060137	620060137	Rear Brace
16.	620060160	620060160	Base
17.	620060232	620060232	Front Left Brace
18.	620060233	620060233	Front Right Brace
19.	620060236	620060236	Right Side Framework 30"Assembly
20.	620060237	620060237	Left Side Framework 30"Assembly
21.	620060146	620060146	Elevation Skid 30 Inch
22.	620060148	620060148	Carton Liner 30 Inch
23.	620060170	620060170	Shipping Bracket 2 Req. (Field Installed)
24.	620060234	620060234	Carton, Elevation 30 Inch
25.	620060235	620060235	Corner Post (Each), Elevation, (4 Required)
26.	620060150	620060150	Pop Rivets Not Shown (Package of 10)

© 2018, Cornelius Inc.

NOTE: * = Represent Condenser Type and Cube Size Refer page 1 for more details.

220-240/50/1 - Machine Voltage			
Item No.	Model Number		Description
	CNM0830**5	CNM1030**5	
1.	620060226	620060226	Front Panel
2.	620060151P	620060151P	Front Panel Screws
3.	620060227	620060227	Left Side Side Panel
4.	620060135	620060135	Top Panel-Air Cooled
5.	620060143	620060143	Top Panel-Remote and Water Cooled
6.	620204441P	620204441P	Rear Cover Screws
7.	620060136	620060136	Rear Cover
8.	620060228	620060228	Right Side Panel-Remote and Water Cooled
9.	620060229	620060229	Right Side Panel-Air Cooled
10.	620060140	620060140	Junction Box Cover
11.	620204441P	620204441P	Junction Box Screw
12.	620060230	620060230	Left Front Corner Post
13.	620060231	620060231	Right Front Corner post
14.	620060138	620060138	Brace 30 Inch
15.	620060137	620060137	Rear Brace
16.	620060160	620060160	Base
17.	620060232	620060232	Front Left Brace
18.	620060233	620060233	Front Right Brace
19.	620060236	620060236	Right Side Framework 30"Assembly
20.	620060237	620060237	Left Side Framework 30"Assembly
21.	620060146	620060146	Elevation Skid 30 Inch
22.	620060148	620060148	Carton Liner 30 Inch
23.	620060170	620060170	Shipping Bracket 2 Req. (Field Installed)
24.	620060234	620060234	Carton, Elevation 30 Inch
25.	620060235	620060235	Corner Post (Each), Elevation, (4 Required)
26.	620060150	620060150	Pop Rivets Not Shown (Package of 10)

 © 2018, Cornelius Inc.

WATER SYSTEM PART LIST

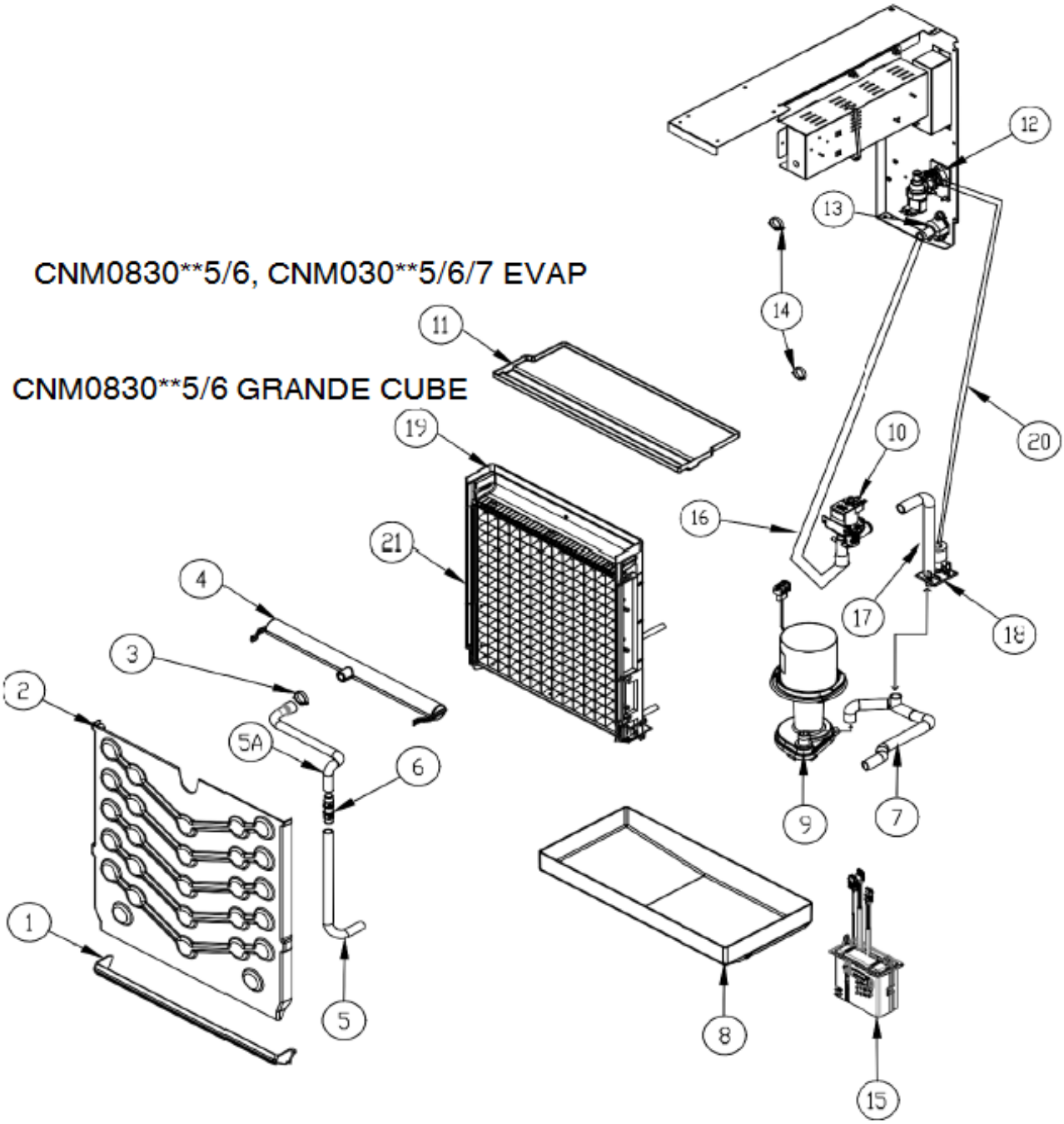

Figure 2.

The Model Number of the machine has a designator for the Cube Size:

Example:	CNM0430A**F**0	**F** = Full Cube	Cube Size = 7/8 x 7/8 x 7/8
	CNM0430A**H**0	**H** = Half Cube	Cube Size = 3/8 x 7/8 x 7/8
	CNM0830A**G**6	**G** = GRANDE Cube	Cube Size = 1 1/4 x 1 1/8 x 7/8

NOTE: * = Represent Condenser Type and Cube Size Refer page 1 for more details.

Sl. No	Model		Description
	CNM0830**6	CNM1030**6	
	208-230/60/1	208-230/60/1	Machine Voltage
1.	620060163	620060163	Lower Curtain Assembly
2.	620060238	620060238	Evaporator Cover
3.	620204421	620204421	Hose Clamp, Plastic
4.	620060171	620060171	Water Distribution Tube Assembly
5.	620060239	620060239	Water Tube, Side
5A.	620060240	620060240	Water Tube Upper
6.	620060176	620060176	Coupler, Straight, 5/8 I.D. Tubing
7.	620060167	620060167	Water Tube, Sump
8.	620060164	620060164	Sump/Water Trough
9.	620060241	620060241	Water Pump
10.	620060003	620060003	Purge Valve
11.	620060165	620060165	Top Cover
12.	620060155	620060155	Water Inlet Valve
13.	620060175	620060175	Drain Fitting
14.	620204420	620204420	Hose Clamp, Plastic
15.	620060120	620060120	Float Switch Assembly (Includes Instructions)
16.	620060144	620060144	Purge Valve Tubing to Drain
17.	620060159	620060159	Purge Valve Tube to Inlet Outlet Bracket
18.	620060166	620060166	Inlet Outlet Bracket
19.	620060242	620060242	Evaporator-FULL Cube = 7/8 x 7/8 x 7/8
	620060243	620060243	Evaporator-HALF Cube = 3/8 x 7/8 x 7/8
20.	620060158	620060158	Water Inlet Valve to Inlet Outlet Bracket Tube

 © 2018, Cornelius Inc.

NOTE: * = Represent Condenser Type and Cube Size Refer page 1 for more details.

Item No.	Model Number		220-240/50/1 Machine Voltage
	CNM0830**5	CNM1030**5	Description
1.	620060163	620060163	Lower Curtain Assembly
2.	620060238	620060238	Evaporator Cover
3.	620204421	620204421	Hose Clamp, Plastic
4.	620060171	620060171	Water Distribution Tube Assembly
5.	620060239	620060239	Water Tube, Side
5A.	620060269	620060269	Water Tube Upper
6.	620060176	620060176	Coupler, Straight, 5/8 I.D. Tubing
7.	620060167	620060167	Water Tube, Sump
8.	620060164	620060164	Sump/Water Trough
9.	620060241	620060241	Water Pump
10.	620060003	620060003	Purge Valve
11.	620060165	620060165	Top Cover
12.	620060155	620060155	Water Inlet Valve
13.	620060175	620060175	Drain Fitting
14.	620204420	620204420	Hose Clamp, Plastic
15.	620060120	620060120	Float Switch Assembly (Includes Instructions)
16.	620060144	620060144	Purge Valve Tubing to Drain
17.	620060159	620060159	Purge Valve Tube to Inlet Outlet Bracket
18.	620060166	620060166	Inlet Outlet Bracket
19.	620060242	620060242	Evaporator-FULL Cube = 7/8 x 7/8 x 7/8
	620060243	620060243	Evaporator-HALF Cube = 3/8 x 7/8 x 7/8
20.	620060158	620060158	Water Inlet Valve to Inlet Outlet Bracket Tube

© 2018, Cornelius Inc.

Publication Number: 548000062

AIR COOLED PART LIST

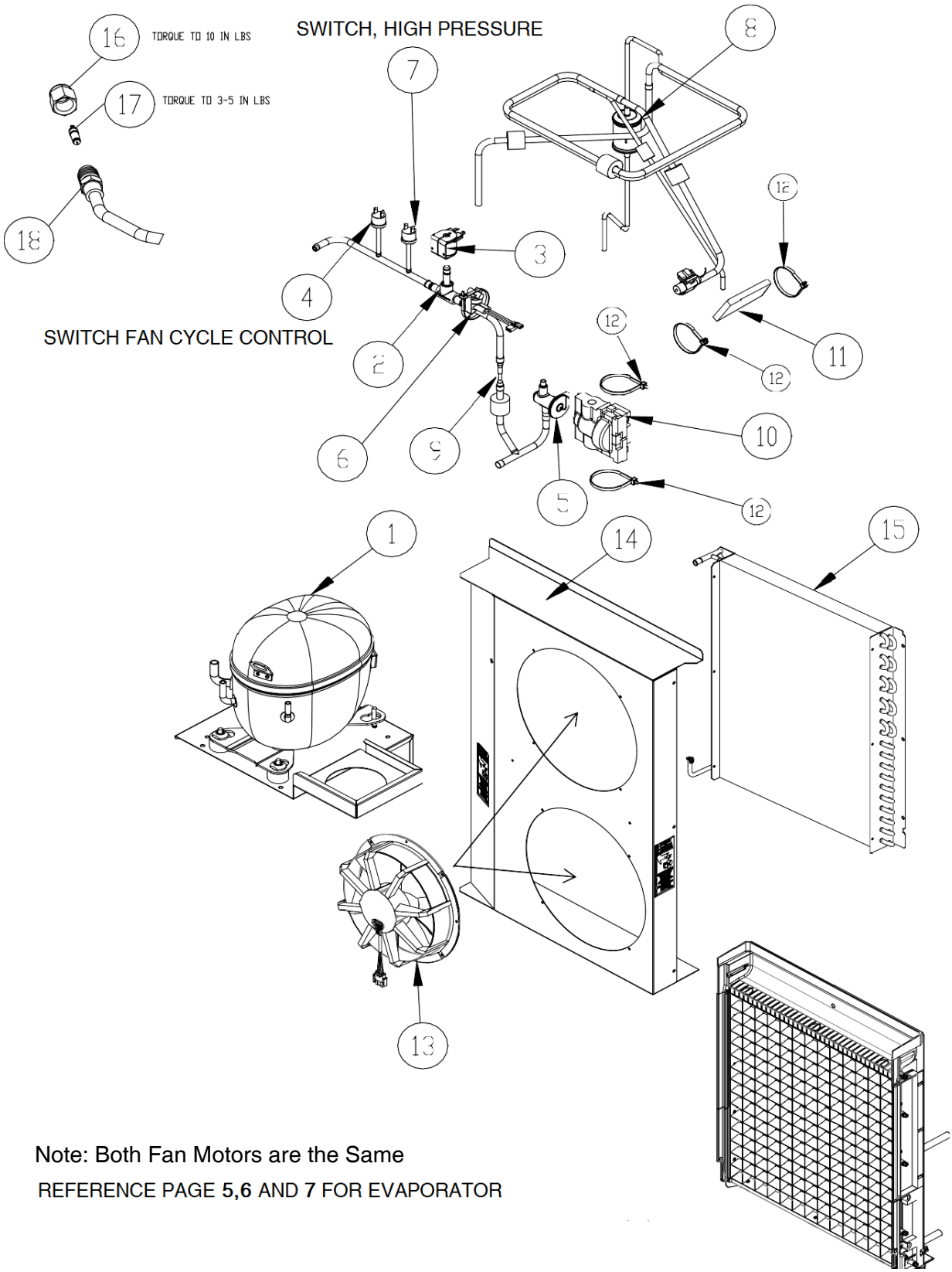

Note: Both Fan Motors are the Same

REFERENCE PAGE **5,6** AND **7** FOR EVAPORATOR

Figure 3.

 © 2018, Cornelius Inc.

NOTE: * = Cube Size Refer page 1 for more details.

Item No.	Model Number		Description
	CNM0830A*6	CNM1030A*6	
	208-230/60/1	208-230/60/1	Machine Voltage
1.	620060244	620060249	Compressor Kit
2.	620060184	620060185	Hot Gas Valve Body
3.	620060188	620060188	Hot Gas Valve Coil (240 V)
4.	620060153	620060153	Switch, Fan Cycle
5.	620060245	620060245	TXV
6.	620060152	620060152	High Temp Switch
7.	620060156	620060156	Switch, High Pressure
8.	620204953	620204953	Drier (Included in Compressor Kit)
9.	Not Used	Not Used	Restrictor
10.	620060179	620060179	Insulation, TXV
11.	620060178	620060178	Insulation, Bulb
12.	620060149	620060149	Cable Tie-For TXV and Bulb Insulation
13.	620060190	620060190	Fan Motor Assembly (Both Motors the Same)
14.	620060246	620060246	Fan Shroud
15.	620060247	620060247	Condenser
16.	620204535	620204535	Service Valve Cap
17.	620204534	620204534	Service Valve Core
18.	620060174	620060174	Service Valve Stem
	CNM0830A*6	CNM1030A*6	Starting Components (Included in Comp Kit)
	620060244	620060249	Compressor Kit
	620204658	620204658	Start Capacitor
	620204672	620204672	Run Capacitor
	620060257	620060200	Compressor Relay
	Internal	Internal	Overload

NOTE: * = Cube Size Refer page 1 for more details.

Item No.	Model Number		220-240/50/1 Machine Voltage
	CNM0830A*5	CNM1030A*5	Description
1.	620060250	620060258	Compressor Kit
2.	620060184	620060185	Hot Gas Valve Body
3.	620060188	620060188	Hot Gas Valve Coil (240 V)
4.	620060153	620060153	Switch, Fan Cycle
5.	620060245	620060245	TXV
6.	620060152	620060152	High Temp Switch
7.	620060156	620060156	Switch, High Pressure
8.	620204953	620204953	Drier (Included in Compressor Kit)
9.	Not Used	Not Used	Restrictor
10.	620060179	620060179	Insulation, TXV
11.	620060178	620060178	Insulation, Bulb
12.	620060149	620060149	Cable Tie-For TXV and Bulb Insulation
13.	620060190	620060190	Fan Motor Assembly (Both Motors the Same)
14.	620060246	620060246	Fan Shroud
15.	620060247	620060247	Condenser
16.	620204535	620204535	Service Valve Cap
17.	620204534	620204534	Service Valve Core
18.	620060174	620060174	Service Valve Stem
	CNM0830A*5	CNM1030A*5	Starting Components (Included in Comp Kit)
	620060250	620060258	Compressor Kit
	620204991	620060253	Start Capacitor
	620204672	620060254	Run Capacitor
	620060251	620060255	Compressor Relay
	Internal	Internal	Overload

 © 2018, Cornelius Inc.

WATER COOLED PART LIST

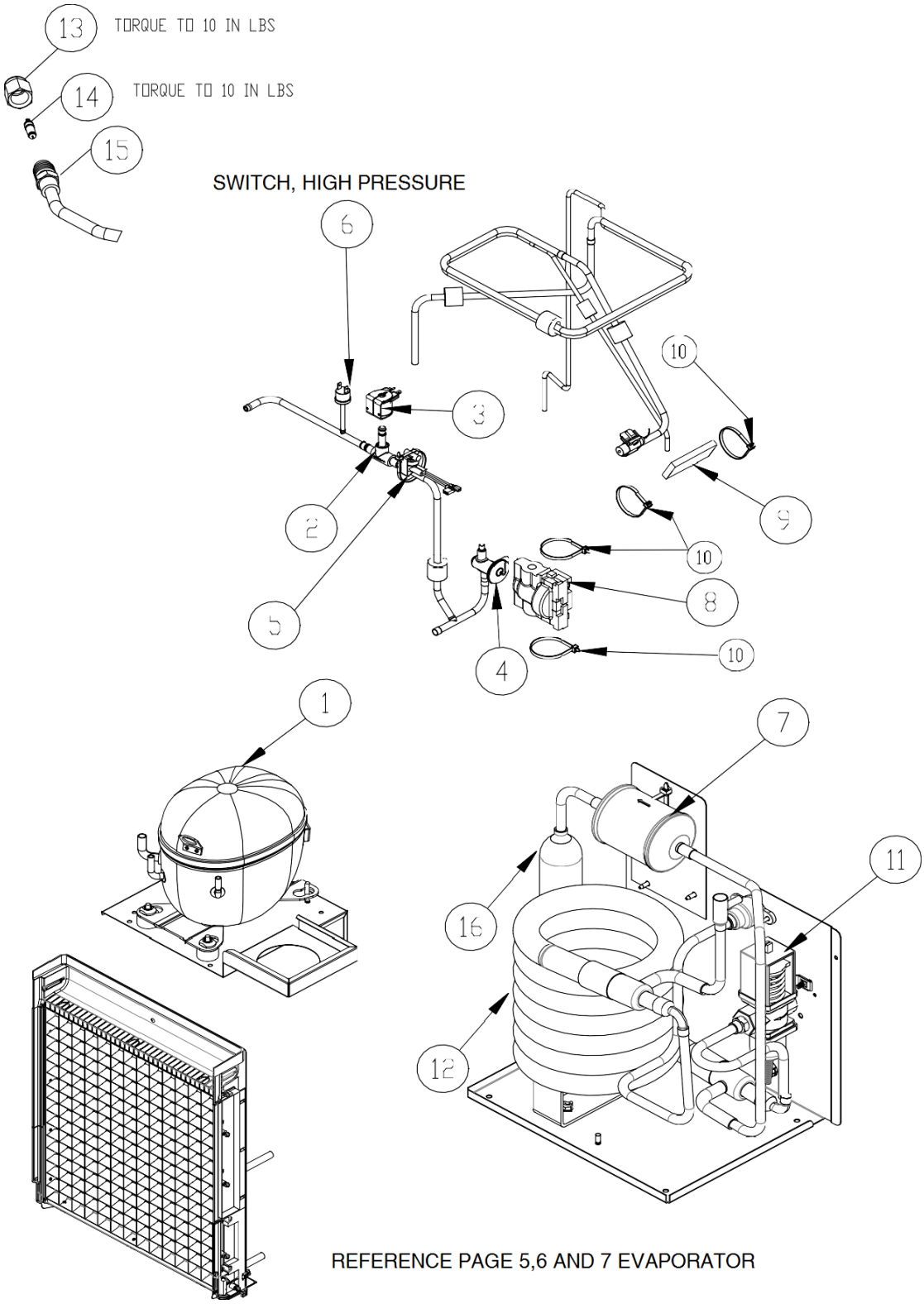

Figure 4.

NOTE: * = Cube Size Refer page 1 for more details.

220-240/50/1 Machine Voltage		
Item No.	Model Number CNM0830W*5	Description
1.	620060250	Compressor Kit
2.	620060184	Hot Gas Valve Body
3.	620060188	Hot Gas Valve Coil
4.	620060245	TXV
5.	620060152	High Temp Switch
6.	620060156	Switch, High Pressure
7.	620204952	Drier (Included in Compressor Kit)
8.	620060179	Insulation, TXV
9.	620060178	Insulation, Bulb
10.	620060149	Cable Tie-For TXV and Bulb Insulation
11.	620204465	Water Regulator
12.	620060256	Condenser
13.	620204535	Service Valve Cap
14.	620204534	Service Valve Core
15.	620060174	Service Valve Stem

CNM0830W*5	Starting Components (Included in Comp Kit)
620060250	Compressor Kit
620204991	Start Capacitor
620204672	Run Capacitor
620060251	Compressor Relay
Internal	Overload

 © 2018, Cornelius Inc.

REMOTE PART LIST

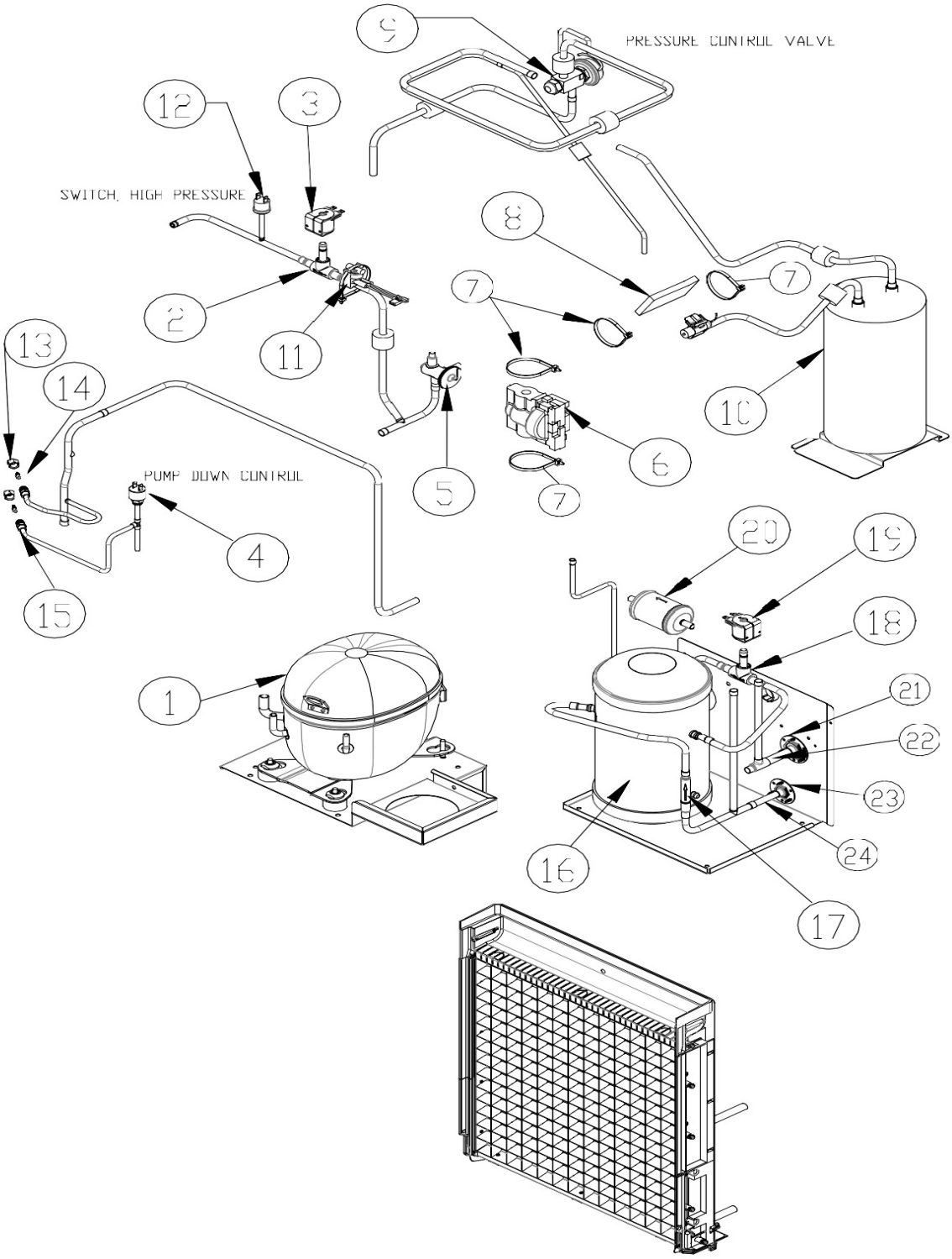

REFERENCE PAGE **5,6 AND 7** FOR EVAPORATOR

Figure 5.

NOTE: * = Cube Size Refer page 1 for more details.

Item No.	Model		Description
	CNM0830R*6	CNM1030R*6	
	208-230/60/1	208-230/60/1	Machine Voltage
1.	620060244	620060249	Compressor Kit
2.	620060184	620060185	Hot Gas Valve Body
3.	620060188	620060188	Hot Gas Valve Coil
4.	620204475	620204475	Pump Down Control
5.	620060245	620060245	TXV
6.	620060179	620060179	Insulation, TXV
7.	620060180	620060180	Cable Tie-For TXV and Bulb Insulation
8.	620060178	620060178	Insulation TXV Bulb
9.	NA	NA	Pressure Control Valve
10.	NA	NA	Accumulator
11.	620060152	620060152	High Temp Switch
12.	620060156	620060156	Switch, High Pressure
13.	620204535	620204535	Service Valve Cap
14.	620204534	620204534	Service Valve Core
15.	620060174	620060174	Service Valve Stem
16.	620204606	620204606	Receiver
17.	620060183	620060183	Check Valve
18.	620060185	620060185	Liquid Line Solenoid
19.	620060188	620060188	Liquid Line Coil
20.	620204953	620204953	Drier (Included in Compressor Kit)
21.	620060173	620060173	1/2 Inch Coupling Flange (Large)
22.	620204527	620204527	1/2 Inch Coupling (Large)
23.	620060172	620060172	3/8 Inch Coupling Flange (Small)
24.	620204526	620204526	3/8 Inch Coupling (Small)

CNM0830R*6	CNM1030R*6	Starting Components (Included in Comp Kit)
620060244	620060249	Compressor Kit
620204658	620204658	Start Capacitor
620204672	620204672	Run Capacitor
620060257	620060200	Potential Relay
Internal	Internal	Overload

 © 2018, Cornelius Inc.

ELECTRICAL PART LIST

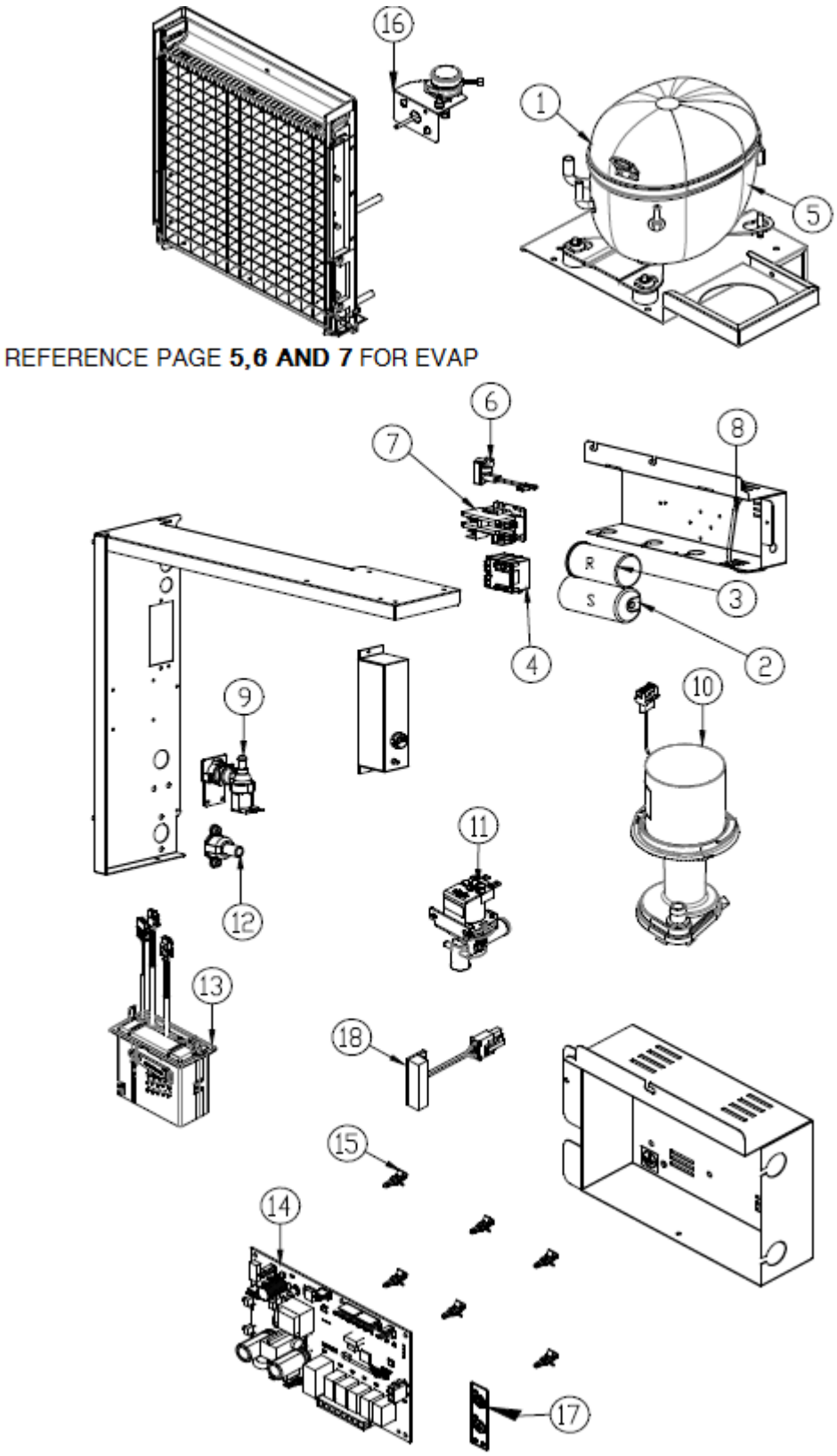

Figure 6.

NOTE: * = Cube Size Refer page 1 for more details.

Item No.	Model Number		Description
	CNM0830**6	CNM1030W*6	
	208-230/60/1	208-230/60/1	Machine Voltage
1.	620060244	620060249	Compressor
2.	620204658	620204658	Start Capacitor
3.	620204672	620204672	Run Capacitor
4.	620060257	620060200	Potential Relay
5.	Internal	Internal	Overload
6.	620060152	620060152	Switch, High Temp
7.	620204545	620204545	Contactor
8.	620060196	620060196	Cable Tie, Metal
9.	620060155	620060155	Valve, Water Inlet
10.	620060241	620060241	Water Pump
11.	620060003	620060003	Purge Valve
12.	620060175	620060175	Purge Drain
13.	620060120	620060120	Float Switch Assembly (Includes Instructions)
14.	620060210	620060210	Board Dual Voltage
15.	620060213	620060213	Plastic Standoff, Control Board (Pkg of 10)
16.	620060212	620060212	Harvest Assist
17.	620060214	620060214	Membrane Switch (Includes Cable)

220-240/50/1 Machine Voltage			
Item No.	Model Number		Description
	CNM0830W*5	CNM1030W*5	
1.	620060250	620060258	Compressor Kit
2.	620204991	620060253	Start Capacitor
3.	620204672	620060254	Run Capacitor
4.	620060251	620060255	Compressor Relay
5.	Internal	Internal	Overload
6.	620060152	620060152	Switch, High Temp
7.	620204545	620204545	Contactor
8.	620060196	620060196	Cable Tie, Metal
9.	620060155	620060155	Valve, Water Inlet
10.	620060241	620060241	Water Pump
11.	620060003	620060003	Purge Valve
12.	620060175	620060175	Purge Drain
13.	620060120	620060120	Float Switch Assembly (Includes Instructions)
14.	620060210	620060210	Board Dual Voltage
15.	620060213	620060213	Plastic Standoff, Control Board (Pkg of 10)
16.	620060212	620060212	Harvest Assist
17.	620060214	620060214	Membrane Switch (Includes Cable)

 © 2018, Cornelius Inc.

 © 2018, Cornelius Inc.

Cornelius Inc.
www.cornelius.com